NDS™ WE PUT WATER IN ITS PLACE

# TECHNICAL SPECIFICATIONS

# DURA SLOPE™ CHANNEL DRAINS

**Specifications:** NDS Dura Slope™ is a 6⅝" wide, 48" long trench drain system with a built-in slope of 0.7%. Each channel section is molded of gray structural foam polyethylene with UV inhibitors and has a 4" inside diameter with a 2" radius bottom. The system consists of 4-foot channel sections including 24 pre-sloped channel sections and 9 neutral channel sections. The sloped channel sections enable the system to extend to a length of 96 feet with a continuous slope. Add neutral channels to extend the system run to an excess of 132 feet. By incorporating central collection through the use of the catch basin assembly, the Dura Slope™ trench drain system can be extended to lengths up to 266 feet. Dura Slope™ channels are designed with the pre-installed ProFit™ locking system, which maintains structural integrity during installation and locking devices for the grating. LeveLoc™ integral re-bar supports are located at 24" intervals along each side of the channel and contain an internal protruding knob designed to grip #3 or #4 re-bar (⅜" – ½") for easier channel height adjustment during installation. DuraLoc™ tongue and groove ends connect allowing for a precise fit and ensure straight channel runs, incorporating an integral snap-lock feature that prevents joint movement during channel installation. Each channel section is molded with a bottom outlet allowing for system versatility and ensuring proper drainage. Expansion joints must be provided parallel to each side of the drain run.

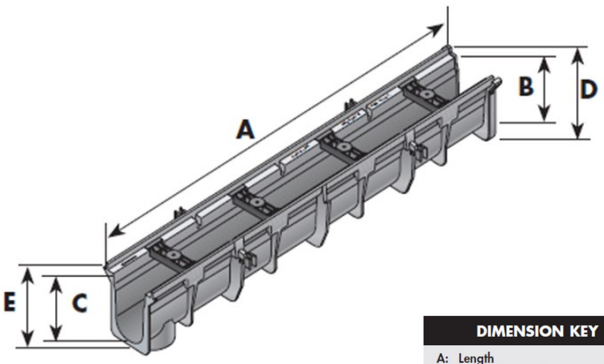


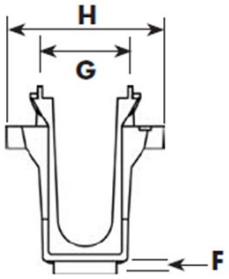


Lightweight 4 ft. modular sections
Easier handling and installation
Lower freight costs

2" radius bottom
Minimizes debris build-up

Polyethylene material
Durable and inexpensive
Less breakage versus concrete
High chemical resistance

Bottom outlet on each channel section
System versatility
Requires fewer accessories

0.7% built-in slope
Maintain optimum flow rates throughout system

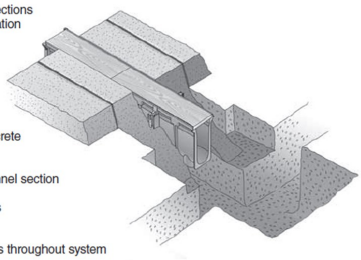

| DIMENSION KEY | |
|---|---|
| A: | Length |
| B: | Min. Inner Depth |
| C: | Max. Inner Depth |
| D: | Min. Outer Depth |
| E: | Max. Outer depth |

| COMMON DIMENSION FOR ALL CHANNEL SECTIONS | |
|---|---|
| F: Bottom Outlet Depth | 0.65" |
| G: Width | 6" |
| H: Re-bar Lock Width | 10.185" |

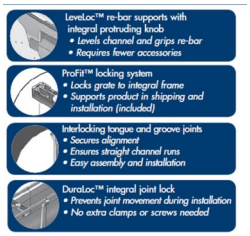


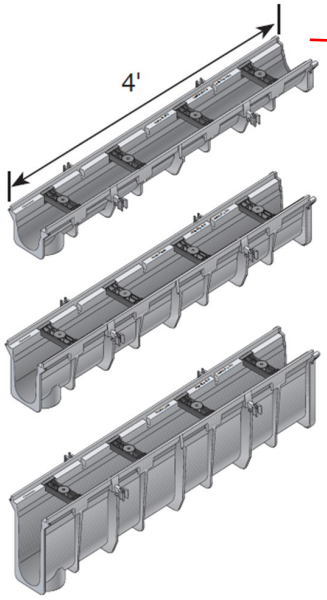


| PART NUMBERS | WEIGHT (LBS) | FLOW RATE GPM | LPM | DIMENSIONS (INCHES) A | B | C | D | E | PRODUCT CLASS |
|---|---|---|---|---|---|---|---|---|---|
| DS-090N | 7.452 | 75 | 284 | 48" | 3.998 | 3.998 | 5.354 | 5.760 | 25DS |
| DS-091 | 7.524 | 75 | 284 | 48" | 3.998 | 4.334 | 5.690 | 5.770 | 25DS |
| DS-091N | 7.812 | 89 | 337 | 48" | 4.334 | 4.334 | 5.692 | 6.103 | 25DS |
| DS-092 | 7.929 | 89 | 337 | 48" | 4.334 | 4.670 | 6.026 | 6.106 | 25DS |
| DS-a093 | 8.269 | 103 | 390 | 48" | 4.670 | 5.006 | 6.362 | 6.442 | 25DS |
| DS-094 | 8.638 | 117 | 443 | 48" | 5.006 | 5.342 | 6.698 | 6.778 | 25DS |
| DS-094N | 8.926 | 131 | 496 | 48" | 5.342 | 5.342 | 6.700 | 7.111 | 25DS |
| DS-095 | 8.998 | 131 | 496 | 48" | 5.342 | 5.678 | 7.034 | 7.114 | 25DS |
| DS-096 | 9.369 | 145 | 549 | 48" | 5.678 | 6.014 | 7.370 | 7.450 | 25DS |
| DS-097 | 9.741 | 159 | 602 | 48" | 6.014 | 6.350 | 7.706 | 7.786 | 25DS |
| DS-097N | 10.040 | 173 | 655 | 48" | 6.350 | 6.350 | 7.708 | 8.119 | 25DS |
| DS-098 | 10.112 | 173 | 655 | 48" | 6.350 | 6.686 | 8.042 | 8.122 | 25DS |
| DS-099 | 10.484 | 187 | 708 | 48" | 6.686 | 7.022 | 8.378 | 8.458 | 25DS |
| DS-100 | 10.856 | 201 | 761 | 48" | 7.022 | 7.358 | 8.714 | 8.794 | 25DS |
| DS-100N | 11.156 | 215 | 814 | 48" | 7.358 | 7.358 | 8.716 | 9.127 | 25DS |
| DS-101 | 11.228 | 215 | 814 | 48" | 7.358 | 7.694 | 9.050 | 9.130 | 25DS |
| DS-102 | 11.599 | 229 | 867 | 48" | 7.694 | 8.030 | 9.386 | 9.466 | 25DS |
| DS-103 | 11.971 | 243 | 920 | 48" | 8.030 | 8.366 | 9.722 | 9.802 | 25DS |
| DS-103N | 12.271 | 257 | 973 | 48" | 8.366 | 8.366 | 9.724 | 10.135 | 25DS |
| DS-104 | 12.343 | 257 | 973 | 48" | 8.366 | 8.702 | 10.058 | 10.138 | 25DS |
| DS-105 | 12.714 | 271 | 1026 | 48" | 8.702 | 9.038 | 10.394 | 10.474 | 25DS |
| DS-106 | 13.086 | 285 | 1079 | 48" | 9.038 | 9.374 | 10.730 | 10.810 | 25DS |
| DS-106N | 13.386 | 299 | 1132 | 48" | 9.374 | 9.374 | 10.732 | 11.143 | 25DS |
| DS-107 | 13.458 | 299 | 1132 | 48" | 9.374 | 9.710 | 11.066 | 11.146 | 25DS |
| DS-108 | 13.829 | 313 | 1185 | 48" | 9.710 | 10.046 | 11.402 | 11.482 | 25DS |
| DS-109 | 14.201 | 327 | 1238 | 48" | 10.046 | 10.382 | 11.738 | 11.818 | 25DS |
| DS-109N | 14.501 | 341 | 1291 | 48" | 10.382 | 10.382 | 11.740 | 12.151 | 25DS |
| DS-110 | 14.573 | 341 | 1291 | 48" | 10.382 | 10.718 | 12.074 | 12.154 | 25DS |
| DS-111 | 14.945 | 355 | 1344 | 48" | 10.718 | 11.054 | 12.410 | 12.490 | 25DS |
| DS-112 | 15.316 | 368 | 1393 | 48" | 11.054 | 11.390 | 12.746 | 12.826 | 25DS |
| DS-112N | 15.616 | 382 | 1446 | 48" | 11.390 | 11.390 | 12.785 | 13.158 | 25DS |
| DS-113 | 15.688 | 382 | 1446 | 48" | 11.390 | 11.726 | 13.082 | 13.162 | 25DS |
| DS-114 | 16.060 | 396 | 1499 | 48" | 11.726 | 12.062 | 13.418 | 13.498 | 25DS |


851 N. Harvard Avenue
Lindsay, CA 93247
800-726-1994


Visit **ndspro.com** for specs, detail drawings, and case studies

NDS® WE PUT WATER IN ITS PLACE

# 2 FT. METAL PERFORATED DURA SLOPE GRATE

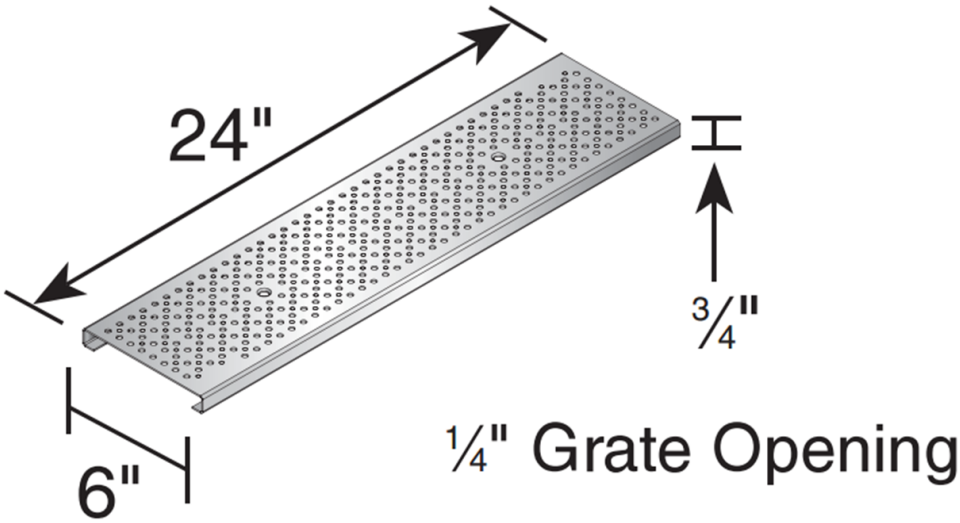


Material: Stainless Steel (DS-226), Galvanized Steel (DS-228)
Weight: DS-226—3.16 lbs each
DS-228—3.83 lbs each
Fits: Use with Dura Slope Channel Drains and Dura Slope Catch Basin (DS-340)
Grate Opening: 7.63 $in^2$ per foot
Will accommodate 23.34 gallons per minute per foot with 1/2" of head.

## Load Recommendation Guide

### Class A

- Loads of 1-60 psi.
- Recommended for pedestrians, bicycles and wheel chair traffic.

**Note:** Some installations may require a concrete collar to meet load rating. Loads are based on encasing product in concrete. Product must be installed using NDS instructions.

## ADA Compliance

NDS provides a wide selection of grates that are compliant with the Americans with Disabilities Act. The ADA Accessibility Guidelines For Buildings and Facilities Section 4.5.4 specifies that ground and floor grates "shall have spaces no greater than 1/2 in (13 mm) wide in one direction."

We are pleased to provide grates that comply with these requirements, so that no individual need be limited from accessing the area safely and confidently.

To see if a grate is ADA compliant, please check the description of the product in our NDS Drainage Catalog: products that meet these requirements are marked "ADA compliant."

Like to find out more about ADA compliance and NDS? Send us your question and we'd be happy to help.

ADA Compliant/Heel-proof